The Anderson Group
Office Space & Executive Suites
www.andersonoffices.com

Executive Suite for Lease

125 Wolf Road Albany, NY 12205

Suite 106 - 356 RSF

$800.00/month



Lease Term
One (1) year.
Two (2) year, with a ninety (90) day cancellation notice.

Lease Includes
Heat, light, air conditioning, taxes, building insurance, maintenance, Monday - Friday, 8:00 am to 5:00 pm.
housekeeping, Monday - Friday, 5:00 pm to 9:00 pm.

Space is offered in "as is" condition.



Area Amenities

1 mile to the NYS Thruway and I-87 Northway.

3 miles to Albany International Airport.

7 miles to Downtown Albany.

Within walking distance of Wolf Road, home to shopping, dining, hotels/motels, grocery stores, drug stores, fitness centers, and a 140 acre passive park.

Susan Anderson Touhey, Managing Partner
Phone: 518-458-7726 **Fax:** 518-482-3018
Email: stouhey@andersonoffices.com
Web: www.andersonoffices.com

Hours of Operation:
Monday - Friday 8:00 am - 5:00 pm
125 Wolf Road Albany, New York 12205

Building Amenities

- Receptionist
- On-site Management
- Plenty of Free Parking
- Café 125 serves breakfast & lunch
- M&T Bank with ATM
- FedEx & UPS drop off/pick up box
- After hour card access
- On-site Notary
- Digital Directories
- Picnic Area







Optional Services

CONFERENCE ROOM

Full Day	$125.00
Half Day	$75.00
Per Hour	$30.00

Reservation only.
Flat screen cable television/Whiteboard

ADMINISTRATIVE SUPPORT

Microsoft Office (Word, Excel, & Publisher)

Rate	$23.00/hour
Minimum Charge - 15 minutes	$6.00 1/4 hour

COLOR COPIER/SCANNER*

		Price Per Page
Black	1-500 copies	$.15
	501 and up	$.10
Color		$.60
Scan to Email		$.15

MAIL DROP*

Monthly	$150.00
Mail Forwarding	Charges Apply

FAXING SERVICE*

Incoming	$1.50 per page
Outgoing	$2.00 per page

INTERNET ACCESS

Spectrum Cable and Fiber, Verizon DSL and T1,
First Light Fiber available.

** Subject to New York State Sales Tax*

Susan Anderson Touhey, Managing Partner
Phone: 518-458-7726 **Fax:** 518-482-3018
Email: stouhey@andersonoffices.com
Web: www.andersonoffices.com

Hours of Operation:
Monday - Friday 8:00 am - 5:00 pm
125 Wolf Road Albany, New York 12205

Floor Plan

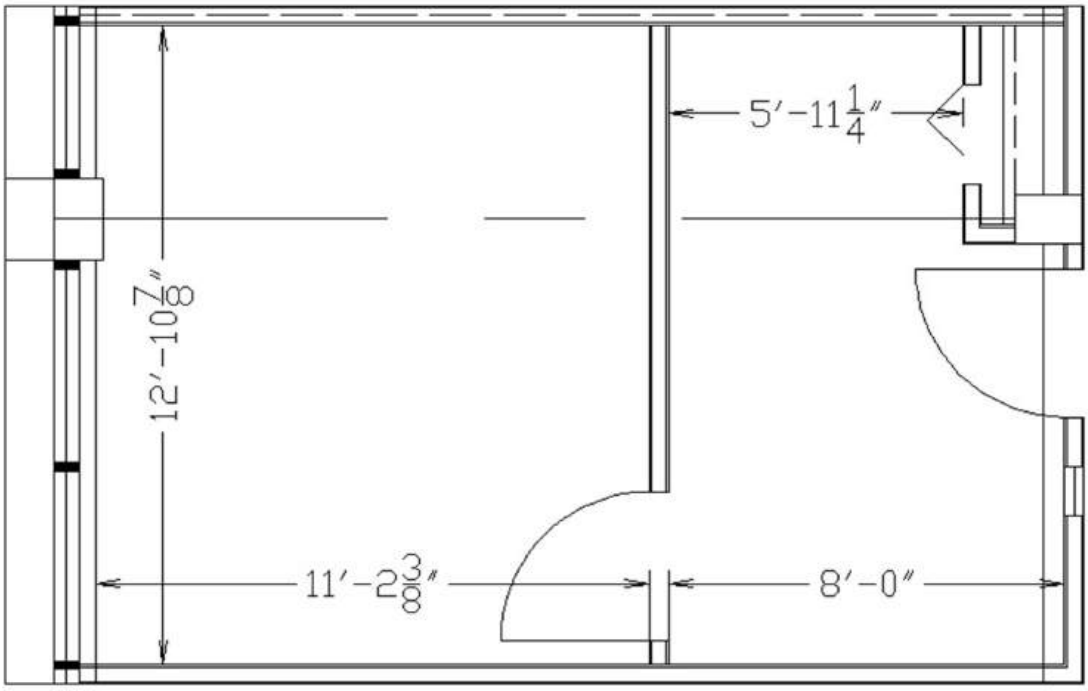

Susan Anderson Touhey, Managing Partner
Phone: 518-458-7726 **Fax:** 518-482-3018
Email: stouhey@andersonoffices.com
Web: www.andersonoffices.com

Hours of Operation:
Monday - Friday 8:00 am - 5:00 pm
125 Wolf Road Albany, New York 12205

The Anderson Group

The health of your business is the heart of our business. For more than 50 years, The Anderson Group has provided trusted, respected office and executive suite leasing to businesses in the Capital Region.

Beyond simply renting you a space, we've developed expertise in office space efficiency, productivity and profitability, so we'll work with you to create a work environment that serves you best, now and into the future.

We're happy to lease directly or through a broker. Rest assured that we offer competitive commissions for brokered leases—as well as flexible, custom leases to meet our tenant's needs.

The Anderson Group
125 Wolf Road Albany, New York 12205
518-458-7726
www.andersonoffices.com